DocuSign Envelope ID: FB4FB64C-E7D1-4E59-A4E3-BA3EDE02B436

PROJECT REFERENCE NO.	SHEET NO.
17BP.14.R.11.2	RF-3

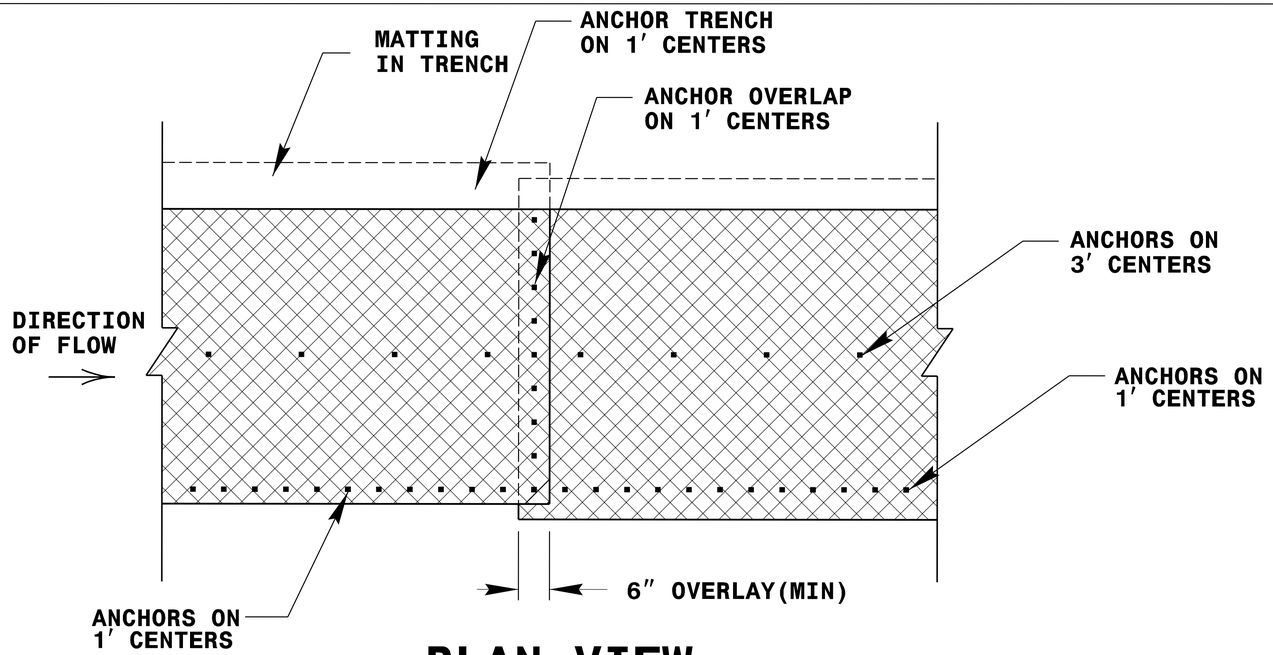

PLAN VIEW

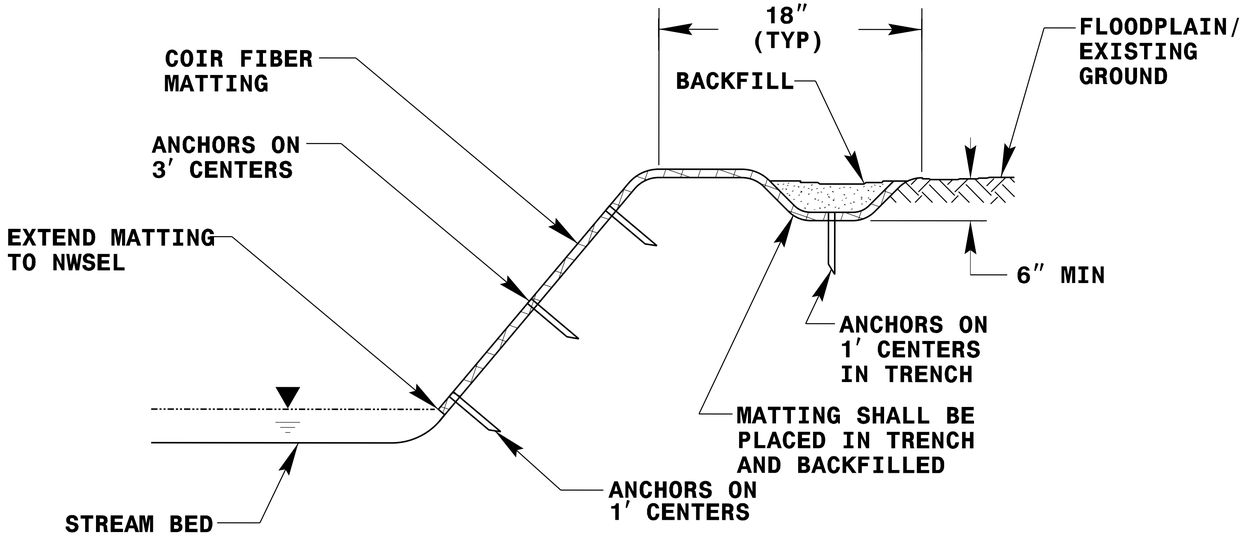

TYPICAL CROSS SECTION

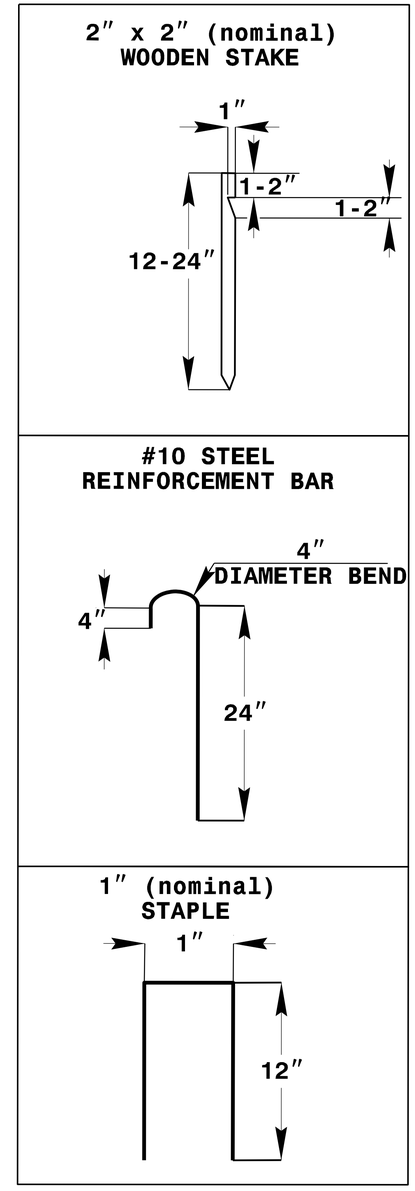

ANCHOR OPTIONS

COIR FIBER MATTING DETAIL

NOT TO SCALE

REVISIONS

12/6/2019 12:43:16 PM
$FILEL$
$PENTBL$$

STREAMBANK REFORESTATION
DETAIL SHEET 2 OF 2
N.C.D.O.T. - ROADSIDE ENVIRONMENTAL UNIT

wsp
1001 Morehead Square Dr., Suite 610, Charlotte NC, 28203
NC LIC NO. F-0165